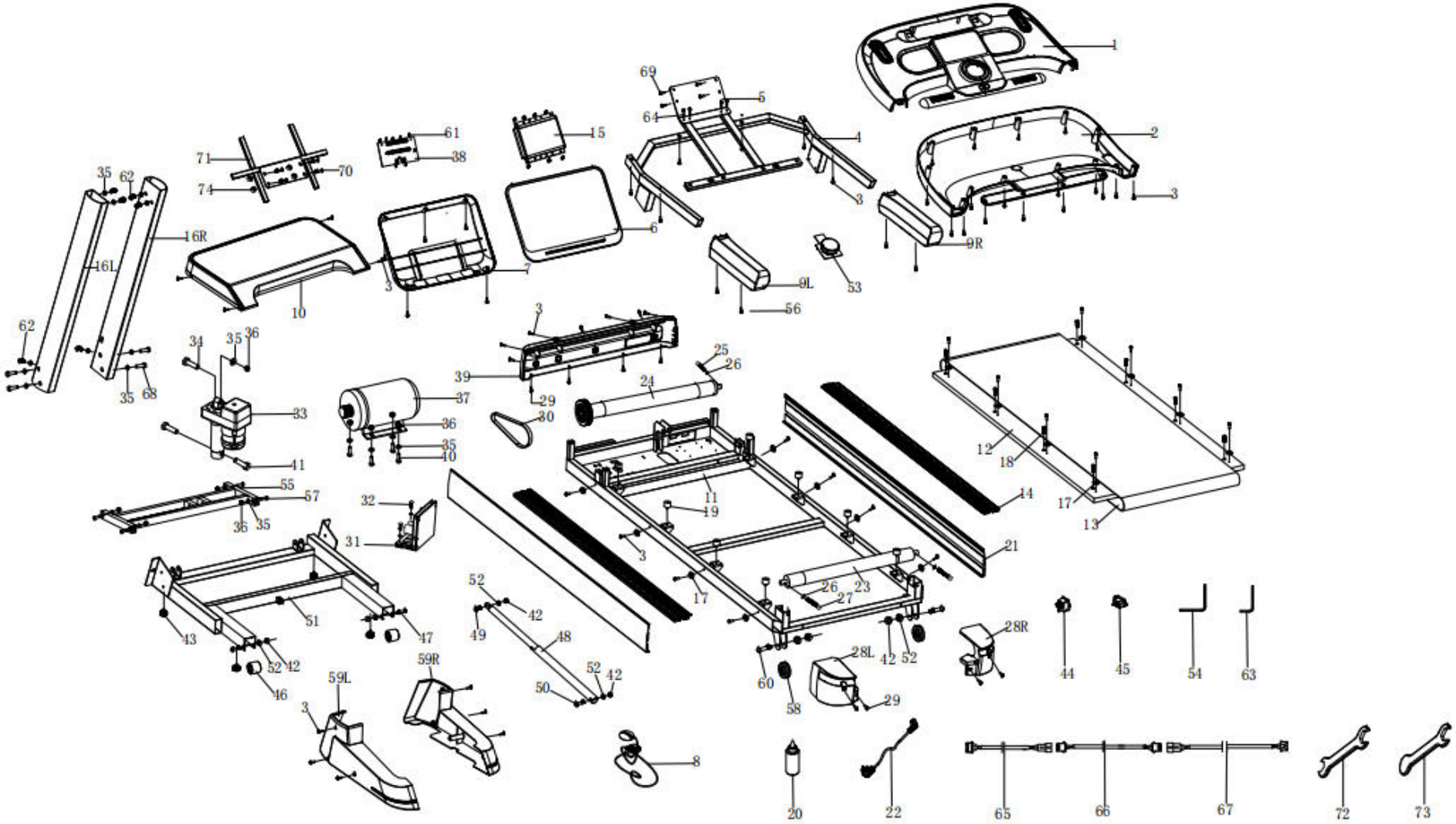
1
2
3
4
5
6
7
8
9L
9R
10
11
12
13
14
15
16L
16R
17
18
19
20
21
22
23
24
25
26
27
28L
28R
29
30
31
32
33
34
35
36
37
38
39
40
41
42
43
44
45
46
47
48
49
50
51
52
53
54
55
56
57
58
59L
59R
60
61
62
63
64
65
66
67
68
69
70
71
72
73
74

NO	parts name	qty	NO	parts name	qty
1	console cover up	1	38	button pcb	1
2	console cover down	1	39	front cover	1
3	screw M4.2x16	41	40	bolt M10 x 35	4
4	handle frame	1	41	bolt M10 x 30	2
5	fixed piece	2	42	nut M8	6
6	display cover	1	43	foot	4
7	display lower cover	1	44	switch	1
8	safety key	1	45	socket	1
9	PU handle	2	46	wheel	2
10	motor cover	1	47	bolt m8x60	2
11	deck frame	1	48	cylinder	1
12	running deck	1	49	bolt m8x30	1
13	running belt	1	50	bolt M8x35	1
14	side rail	2	51	base frame	1
15	console pcb	1	52	flat washer φ8.5	6
16	upright post	2	53	rotary control switch	1
17	side rail fixer	16	54	Allen key	1
18	bolt M6x25	8	55	incline frame	1
19	cushions	8	56	Bolt M4.2x16	4
20	silicon oil	1	57	bolt M10 x 45	4
21	side rail 2	2	58	real wheel	2
22	power cable	1	59	side cover	2
23	real roller	1	60	bolt M8x45	2
24	front roller	1	61	screw M3x7	8
25	bolt M6x50	1	62	bolt M10 x20	6
26	washer	3	63	allen key S6	1
27	bolt M6x70	2	64	bolt M6x12	4
28	end cap(L/R)	2	65	upper cable	1
29	screw M4.2x13	8	66	middle cable	1
30	motor belt	1	67	lower cable	1
31	controller board	1	68	bolt M10x60	4
32	screw M4x15	2	69	bolt M8x15	4
33	incline motor	1	70	bolt M6x30	4
34	bolt M10x45	1	71	fixed piece frame	1
35	flat washer	19	72	open-ended wrench 14-17	1
36	nut M10	9	73	open-ended wrench 10	1
37	motor	1	74	nut M6	4